S1400K Phase II

Coordinating Group: SWOG

A Phase II Study of ABBV-399 (Process II) in Patients with c-Met Positive Stage IV or Recurrent Squamous Cell Lung Cancer

(Lung-MAP Sub-Study)

Participants:
SWOG, CTSU (Supported by Alliance, CCTG, ECOG-ACRIN, and NRG)

Study Chairs:
S Waqar (NRG), S Arnold

Statisticians:
M Redman, K Minichiello

Project Manager:
S Basse

Data Coordinators:
L Highleyman, L Everhart

Date Activated:
02/05/2018

Date Closed:
12/21/2018

SCHEMA

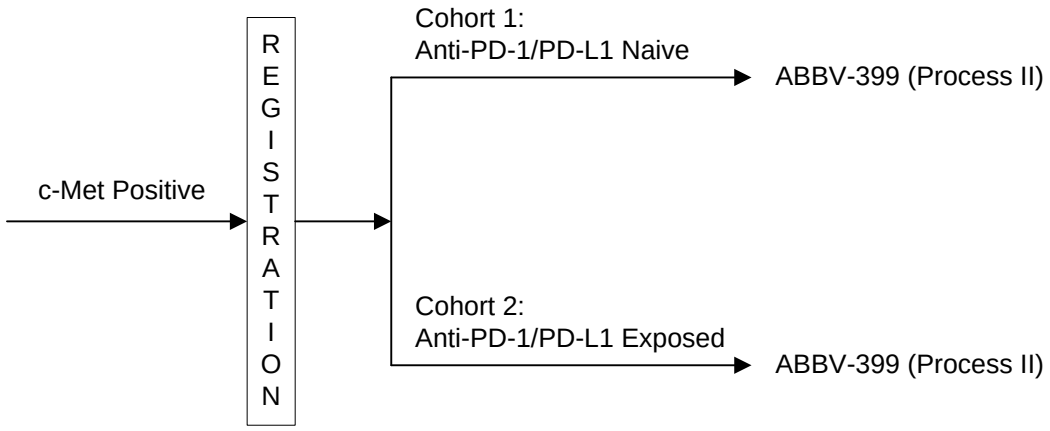

Objectives
The primary objective is to evaluate the overall response rate (ORR) (confirmed and unconfirmed, complete and partial) with ABBV-399 (Process II) in all patients with c-Met positive lung squamous cell carcinoma (SCCA).

To evaluate investigator-assessed progression-free survival (IA-PFS) and overall survival (OS) with ABBV-399 (Process II) in immunotherapy-exposed and relapsed patients with c-Met positive squamous cell tumors.

To evaluate overall response rate (ORR) (confirmed and unconfirmed, complete and partial) with ABBV-399 (Process II) in immunotherapy-exposed and relapsed patients with c-Met positive squamous cell tumors.

To evaluate IA-PFS and OS in all patients with c-Met positive squamous cell tumors.

To evaluate the duration of response (DoR) with ABBV-399 (Process II).

To evaluate the frequency and severity of toxicities associated with ABBV-399 (Process II).

Patient Population
Patients must have been eligible for the screening study and must have been assigned to the S1400K sub-study based on biomarker eligibility defined as c-Met positive. Patients must have experienced disease progression following the most recent line of therapy. Patients must have measurable disease documented by CT or MRI. Patients must not have leptomeningeal disease, spinal cord compression or brain metastases unless both (1) metastases have been locally treated and have remained clinically controlled and asymptomatic for at least 14 days following treatment and prior to registration, and (2) patients has no residual neurological dysfunction and has been off corticosteroids for at least 24 hours prior to sub-study registration.

Patients must not have received prior treatment with c-Met pathway inhibitors. Patients must not be taking strong CYP3A4 inhibitors within seven days prior to sub-study registration, nor plan to take while on protocol treatment and for 14 days after the last dose of study treatment. Patients must not have received any prior systemic therapy within 21 days prior to sub-study registration. Patients must have recovered from any side effects of prior therapy. Patients must not have received any radiation therapy within 14 days prior to sub-study registration. Patients must have fully recovered from the effects of surgery at least 14 days prior to sub-study registration. Patients must not be planning to receive any concurrent chemotherapy, immunotherapy, biologic or hormonal therapy for cancer treatment.

Patients must have Zubrod performance status of 0-1 and adequate hepatic, cardiac, hematologic, and renal function. Patients must have adequate albumin levels. Patients with extensive metastatic liver disease involving at least 50% of the liver are not eligible. Patients must not have peripheral edema greater than Grade 1, or peripheral neuropathy greater than Grade 1 at the time of sub-study registration. Patients must not have documented evidence of acute hepatitis or have an active or uncontrolled infection. Patients with a known history of HIV seropositivity must have undetectable viral load using standard HIV assays in clinical practice, must have an adequate CD4 count, must not require prophylaxis for any opportunistic infections (i.e. fungal, mAC, or PCP prophylaxis), and must not be newly diagnosed within the last 12 months.

Patients must agree to have blood specimens submitted for pharmacokinetic analysis.

Stratification/Descriptive Factors
Patients will be stratified into two cohorts:

Anti-PD-1/PD-L1 naïve: Patients who have not been exposed to an anti-PD-1/PD-L1 therapy.

Anti-PD-1/PD-L1 exposed: Patients with a history of anti-PD-1/PD-L1 therapy.

Accrual Goals
Total accrual goal is 44 patients to achieve 40 eligible patients.

Summary Statement
The study was permanently closed on December 21, 2018 after a planned interim analysis met the stopping criteria for futility.

Fifty patients (14% of patients screened on S1400 while S1400K was open) have been assigned to S1400K and 28 patients have been enrolled.

Of the 22 patients who did not register, seven were ineligible, four were investigator decision, four had symptomatic deterioration, two refused, one died, one was ineligible for the screening study, one had high

creatinine levels, and one was a Canadian patient where study drug was not available. Additionally, one patient has not submitted the Notice of Intention Not to Register.

Of the 28 patients registered, two patients are ineligible due to baseline scans done outside of the protocol-specified window and one patient is ineligible due to liver lesions above the maximum acceptable threshold. Additionally, one patient passed away prior to receiving protocol treatment and one patient will not receive protocol treatment. Thus, these five are not included in any analysis.

Twenty-three patients have been assessed for adverse events. There have been three Grade 5 treatment-related adverse events: two due to pneumonitis and one due to bronchopulmonary hemorrhage. One of the pneumonitis patients also experienced Grade 4 treatment-related decreased neutrophil count and respiratory failure. The other pneumonitis patient also experienced Grade 4 treatment-related cardiac arrest.

Registration by Institution

Institutions	Total Reg	Institutions	Total Reg
Georgia NCORP	4	Michigan CRC NCORP	1
Southeast COR NCORP	2	Mt Sinai Med Ctr	1
Baptist MU-NCORP	1	Northwest NCORP	1
Fred Hutchinson CRC	1	Wichita NCORP	1
Hawaii MU-NCORP	1	Wisconsin NCORP	1
Heartland NCORP	1	ALLIANCE	5
Henry Ford Hospital	1	NRG	4
Kansas, U of	1	ECOG-ACRIN	1
MAVERIC	1	**Total (17 Institutions)**	**28**

Registration, Eligibility, and Evaluability

Data as of February 7, 2019

	ABBV-399 (Process II)
NUMBER REGISTERED	28
INELIGIBLE	3
ELIGIBLE	25
Not Analyzable	2
RESPONSE ASSESSMENT	
Determinable	21
Not Determinable	2
ADVERSE EVENT ASSESSMENT	
Evaluable	23

Patient Characteristics

Data as of February 7, 2019

	ABBV-399 (Process II) (n=23)	
AGE		
Median	65.3	
Minimum	57.7	
Maximum	81.6	
SEX		
Males	13	57%
Females	10	43%
HISPANIC		
No	23	100%

	ABBV-399 (Process II) (n=23)	
RACE		
White	21	91%
Asian	2	9%
PRIOR ANTI-PD-1/PD-L1 THERAPY		
No	11	48%
Yes	12	52%
PRIOR LINES OF TREATMENT FOR STAGE IV DISEASE		
0	7	30%
1	7	30%
2	5	22%
3	3	13%
4	1	4%
PERFORMANCE STATUS		
0	5	22%
1	18	78%
WEIGHT LOSS PAST 6 MONTHS		
< 5%	17	74%
5 - < 10%	3	13%
10 - < 20%	3	13%

Treatment Summary

Data as of February 7, 2019

	ABBV-399 (Process II)
NUMBER ON PROTOCOL TREATMENT	1
NUMBER OFF PROTOCOL TREATMENT	22
REASON OFF TREATMENT	
Treatment completed as planned	0
Adverse Event or side effects	3
Refusal unrelated to adverse event	0
Progression/relapse	18
Death	1
Other - not protocol specified	0
Reason under review	0
MAJOR PROTOCOL DEVIATIONS	0
LOST TO FOLLOW-UP	0
CONSENT WITHDRAWAL AFTER TREATMENT INITIATION	0

Number of Patients with a Given Type and Grade of Adverse Event

Adverse Events Unlikely or Not Related to Treatment Excluded

Adverse Events with No Entries for Grades 3 to 5 Have Been Suppressed

Data as of February 7, 2019

	ABBV-399 (Process II) (n=23) Grade			
ADVERSE EVENTS	**<=2**	**3**	**4**	**5**
AST increased	22	1	0	0
Anemia	22	1	0	0
Anorexia	22	1	0	0
Blood bilirubin increased	22	1	0	0
Bronchopulmonary hemorrhage	22	0	0	1
Cardiac arrest	22	0	1	0
Dehydration	22	1	0	0
Fatigue	21	2	0	0
Febrile neutropenia	22	1	0	0
Hypocalcemia	22	1	0	0
Hypokalemia	22	1	0	0
Hyponatremia	22	1	0	0
Hypophosphatemia	21	2	0	0
Lymphocyte count decreased	22	1	0	0
Nausea	22	1	0	0
Neutrophil count decreased	22	0	1	0
Peripheral sensory neuropathy	22	1	0	0
Pneumonitis	21	0	0	2
Respiratory failure	22	0	1	0
Urinary tract infection	22	1	0	0
Vomiting	22	1	0	0
MAX. GRADE ANY ADVERSE EVENT	16	4	0	3